AFM-20DSP-AEC

20–Port Audio Matrix with DSP, AEC and Interchangeable Inputs & Outputs

| HDMI | Speakers | Ethernet - RJ-45 | 4K/60 UHD (4:2:0)

AFM−20DSP−AEC, a member of the Kramer XSPerience family of DSP products, is an advanced, professional audio matrix switcher with 20 analog ports that can be configured as inputs or outputs according to preset I/O configurations. AFM−20DSP−AEC includes multi−channel DSP, AEC (Acoustic Echo Cancellation), mini USB, built−in 2x60W @ 8Ω and 1x120W @ 70V / 100V power amplifier, 4x4 Dante interface, HDMI embedding and de−embedding, USB, and S/PDIF. The comprehensive and user−friendly graphic interface makes configuring every detail of your audio system intuitive and easy

FEATURES

Advanced Audio Matrix Switcher - Professional, studio grade signal conversion technology, Including the latest generation 32–bit advanced Digital Analog Converter architecture to achieve excellent dynamic performance and improved tolerance to clock jitter. Maintains the quality of the original audio signal with selectable sampling rates up to 96 kHz. Flat frequency response, unmatched sonic performance, excellent signal to noise ratio, and extraordinarily low distortion levels

Wide Range of I/O Formats - Includes 20 analog ports, 4x4 Dante interface, HDMI input and output, USB plug & play audio port, and S/PDIF input and output

Teleconference Optimized - Features AEC (Acoustic Echo Cancellation), that prevents the microphone from picking up the far–end echoed speech, so you only share the audio spoken directly into the microphone. An advanced AEC module is included for the 12 X 8 I/O matrix configuration. The AEC module includes a microphone automixer

Multi–Channel Processing - Provides DSP (Digital Sound Processing) that enables simultaneous processing of all input and output signals

Built–in Power Amplifier - 2x60W @ 8− and 1x120W @ 70V / 100V power amplifier

Maximum Flexibility - Customize the analog port configuration: use the default 12 x 8 I/O matrix configuration or select from one of the many other preset I/O configurations. Route any input to any output, even between different formats (for example, route an analog input to an S/PDIF output). Control volume and DSP per port. Route any of the ports to the power amplifier

Teleconference Optimized - Features AEC (Acoustic Echo Cancellation), that prevents the microphone from picking up the far−end echoed speech, so you only hear the audio spoken directly into the microphone

Simple and Powerful Maestro Room Automation - Intuitive user interface enables you to fully automate your meeting room elements. Configure lights, shades, devices and more to be activated by an extensive range of triggers, including input/output connectivity, routing, and button pressing. By minimizing user intervention, Maestro room automation saves meeting prep time and minimizes human error before presentations

Intuitive and Comprehensive Configuration and Control - Via a powerful, user–friendly graphic interface, set volume (gain and attenuation) and DSP per input; execute routing and select line in, mic in, phantom power or line out on each port; configure master level and more. Control signal routing, volume and other basic settings using API commands via RS–232 communication transmitted by a PC, touch screen system or other serial controller

Audio De–embedding - De–embeds the audio signal from the HDMI input for routing to any of the outputs or for routing to the loop output

Programmable - Supports up to 10 global presets per I/O configuration plus 10 mixer snapshot presets

Easy, Cost–Effective Maintenance - LED indicators for main power, line in/out, mic in, clipping, power amp, Dante sync, and HDMI, enable easy local maintenance and troubleshooting. Local firmware upgrade via the USB type–A port ensures lasting, field–proven deployment

Easy Installation - 19” enclosure for rack mounting a unit in a 1U rack space with included rack ears and universal 100–240V AC power connection

TECHNICAL SPECIFICATIONS

Analog Audio	20 Balanced Mono Audio: On 3−pin terminal blocks
Outputs	1 USB: On a female mini USB connector
	1 HDMI: On a female HDMI connector
	1 S/PDIF: On an RCA connector
	120W Amplifier: On a 4–pin large terminal block
	1 S/PDIF: On an RCA connector
Ports	RS-232 On a 3−pin terminal block connector
	Ethernet On an RJ−45 female connector
Inputs	1 HDMI: On a female HDMI connector
	1 S/PDIF: On an RCA connector
	1 USB: On a female mini USB connector
Line/Mic Level Input	Impedance Unbalanced: 7.6kΩ
	Impedance Balanced: 3.8kΩ
	Impedance Microphone: 3.8kΩ
	Nominal level Unbalanced: 0dBV (0.77Vrms)
	Nominal level Balanced +6.8dBu (1.54Vrms)
	Maximum level (Balanced): +8dBu (2Vrms)
	Sensitivity Unbalanced: Full power @ 0dBV (0.77Vrms)
	Sensitivity Balanced: Full power @ +6dBu (1.54Vrms)
	Phantom Power: 48 VDC on/off per input
Line Level Output	Impedance Unbalanced 50Ω
	Impedance Balanced 50Ω
	Frequency Response: 20Hz − 20kHz @ +/−1dB
	S/N Ratio: >100 dB, 20Hz − 20kHz, at unity gain (unweighted)
	Audio THD + Noise <0.01%, 20 Hz − 20 kHz, at unity gain
Line Level Input	Crosstalk: <−85 dB, 20Hz to 20kHz
User Interface	Front Panel LEDs: 1 status, 20 analog audio ports, 4 Dante I/O, HDMI embed, HDMI de–embed, 2 S/PDIF I/O, USB I/O, and 2 amplifier chann
Control RS-232	Baud Rate: 115200
	Data Bits: 8
	Stop Bits: 1
Environmental Conditions	
	Operating Temperature: 0° to +40°C (32° to 104°F)
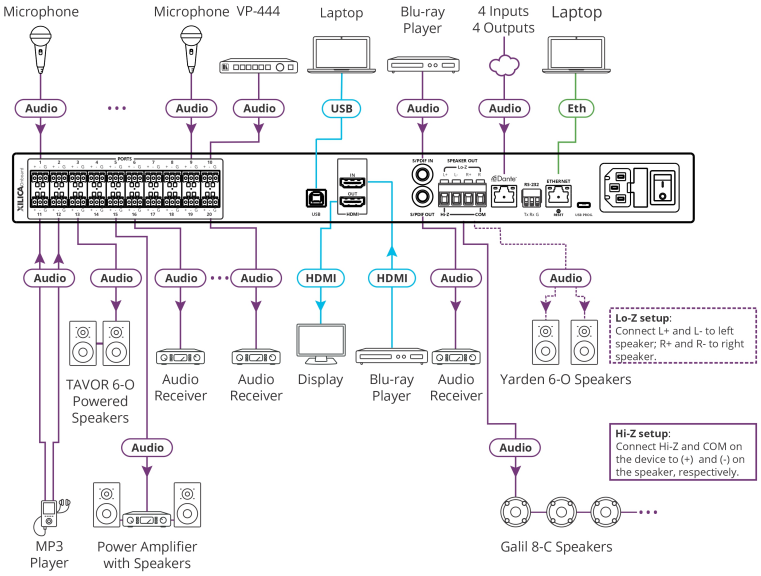
	Storage Temperature: −40° to +70°C (−40° to 158°F)
	Humidity: 10% to 90%, RHL non−condensing
Supported Web Browsers	Windows 7, Windows 10, MAC 10.11: Chrome
Power	Consumption: 190VA
	Source: 100−240V AC 50/60Hz
Regulatory Compliance (Standards Compliance)	Safety: CE
	Environmental RoHs, WEEE
Enclosure	Size: 19” 1U
	Type: Aluminum
	Cooling: Fans
Accessories	Included Power cord
General	Net Dimensions (W, D, H): 43.6cm x 23.7cm x 4.4cm (17.2" x 9.3" x 1.7")
	Shipping Dimensions (W, D, H): 52.5cm x 33cm x 10.7cm (20.7" x 13" x 4.2")
	Net Weight: 1.6kg (3.5lbs)
	Shipping Weight: 2.7kg (5.9lbs) approx
Product Dimensions	43.64cm x 23.72cm x 4.36cm (17.18" x 9.34" x 1.72") W, D, H
Product Weight	2.2kg (4.8lbs) approx
Shipping Dimensions	52.50cm x 33.00cm x 10.70cm (20.67" x 12.99" x 4.21") W, D, H
Shipping Weight	3.0kg (6.6lbs) approx